GLACIER 12

Overview drawing

Date: 18-06-2026 | Version: V1

FRONT VIEW

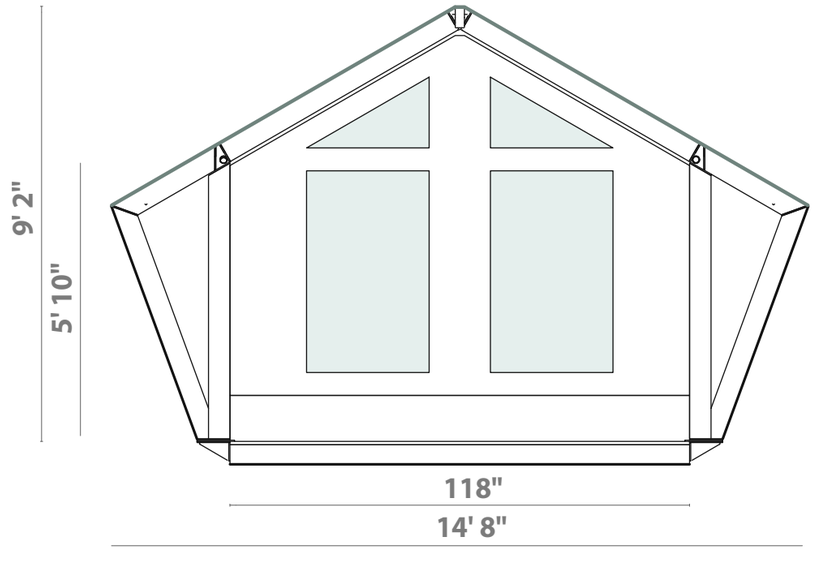

SIDE VIEW

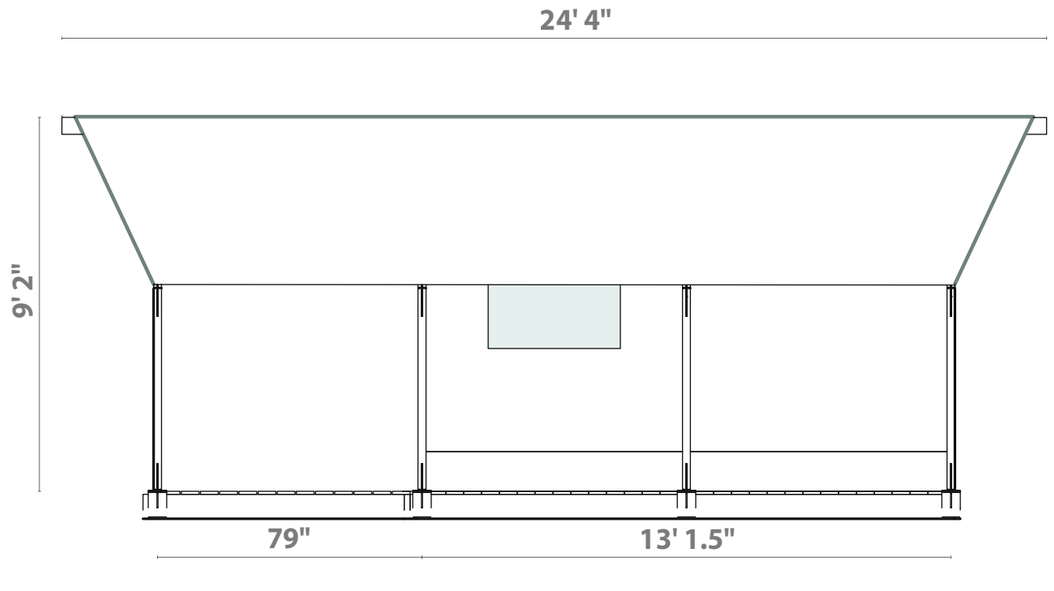

FLOORPLAN

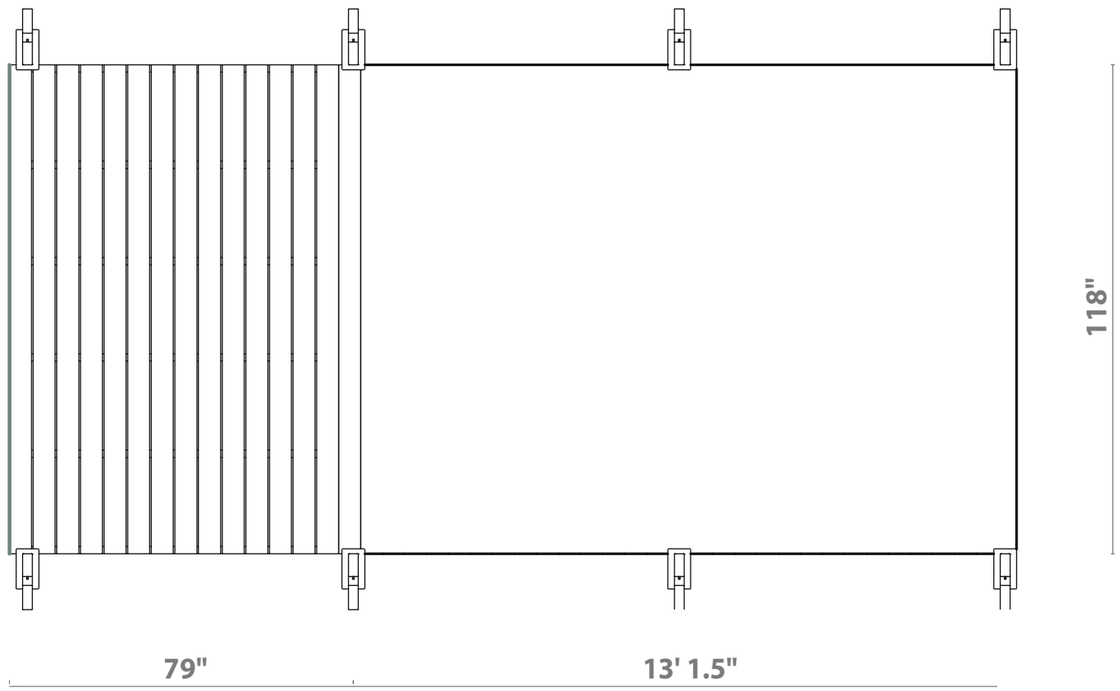

Specifications

Footprint	14' 8" X 24' 4"
Ridge height	9' 2"
Side height	5' 10"
Floor area	130 sq ft

OSSO

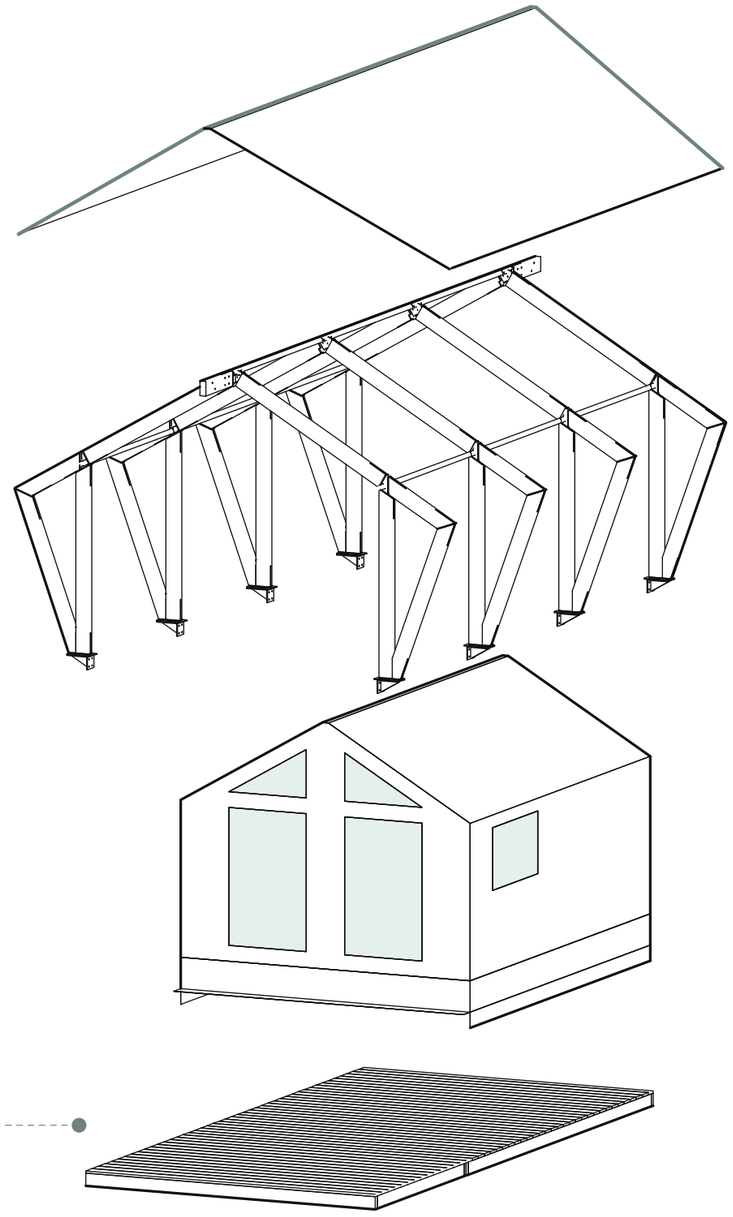

Roof

PVC · 650 or 1050 g/m²

Timber frame

Glulam C24 · steel
S235 hot-dip galvanized

Canvas tent

FPTC 420 · 420 SC
· 420 FRSC

Platform

Built on site· shown
for reference only

OSSO