GLACIER 7.5

Overview drawing

Date: 07-07-2026 | Version: V1

FRONT VIEW

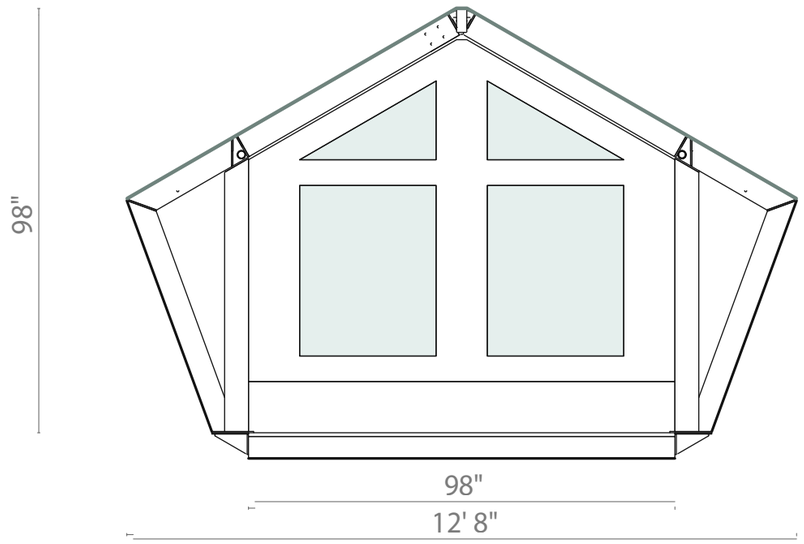

SIDE VIEW

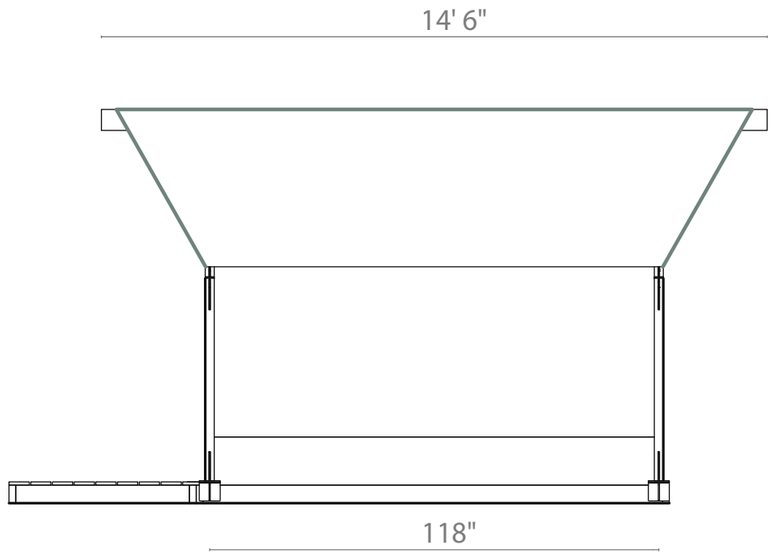

FLOORPLAN

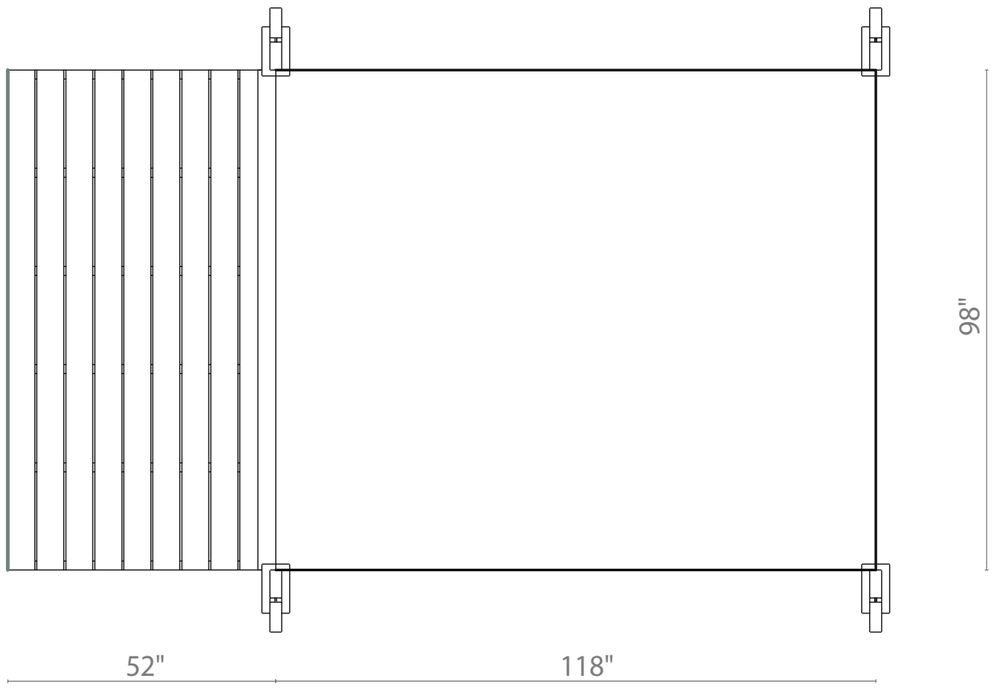

OSSO

GLACIER 7.5

Overview drawing

Date: 07-07-2026 | Version: V1

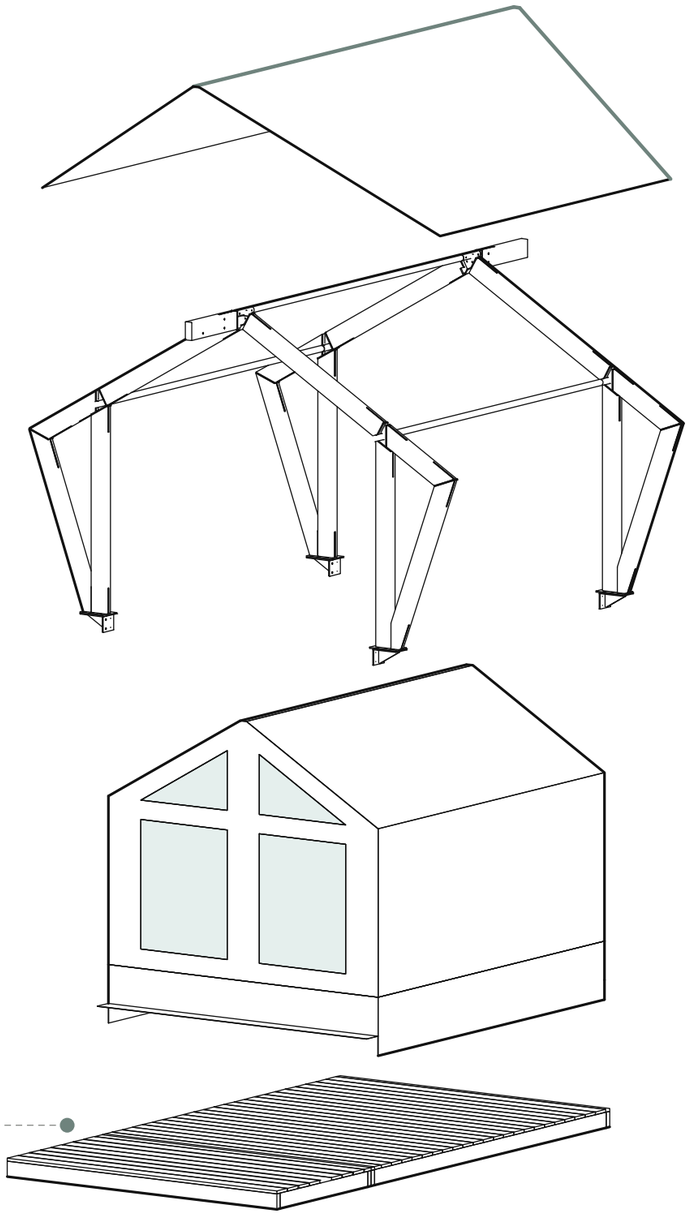

Roof

PVC · 650 or 1050 g/m²

Timber frame

Glulam C24 · steel
S235 hot-dip galvanized

Inner tent

FPTC 420 · 420 SC
· 420 FRSC

Platform

Built on site. Shown
for reference only

OSSO