# Acadia 35 Specifications

Front View

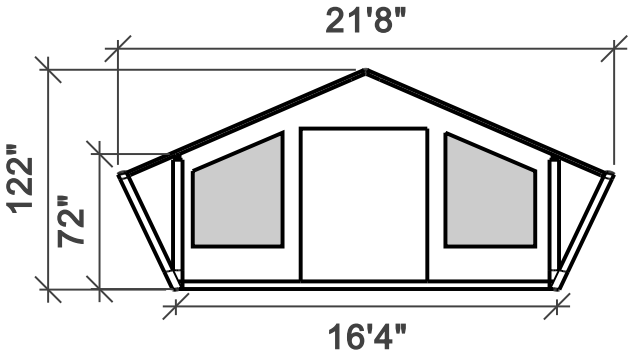


Side View

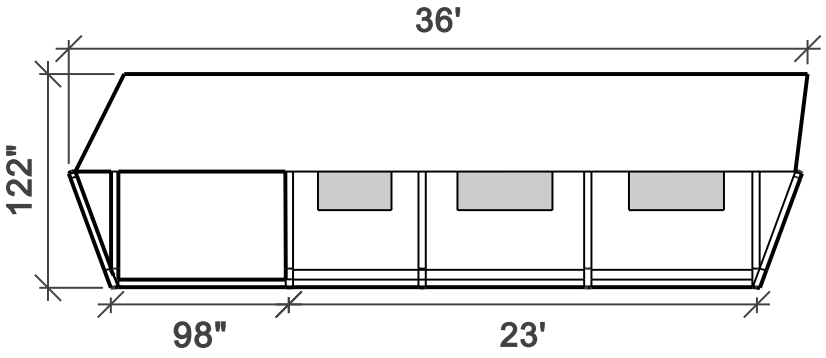


| | |
|---|---|
| Ridge height | 122" |
| Wall height | 72" |
| Interior size | 16' 4" x 23' |
| Interior area | 377 sq ft |
| Porch size | 16' 4" x 98" |
| Porch area | 135 sq ft |

| | |
|---|---|
| PVC Roof | 650g/m² |
| Canvas | FPTC 420, 420 SC, 420 FRSC, Rip Stop 420 |
| Cieling liner | IH 230 |
| Interior walls | FPTC 420, 420 SC, 420 FRSC, Rip Stop 420 |
| Frame | 1.5" powder coated steel |
| Wood frame | 3" round treated pine |

## Platform dimensions

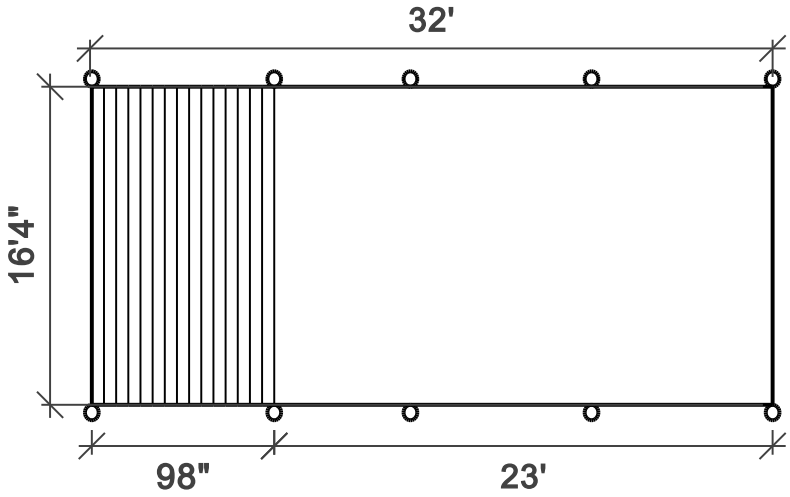


Platform is not provided - to be built on site

www.osso.one