Acadia 25 Specifications

Front View

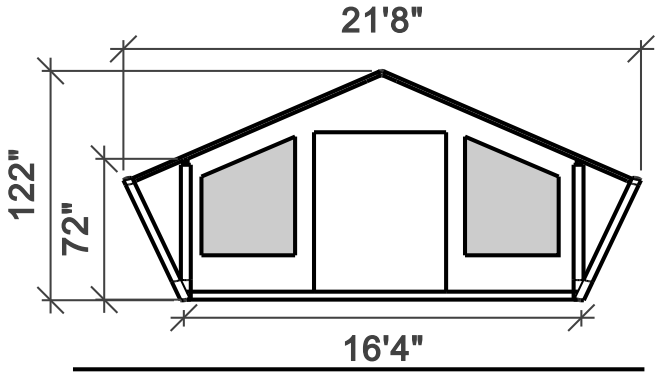

Side View

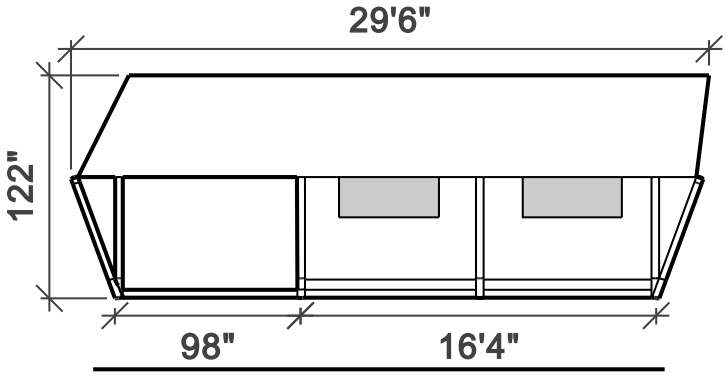

Ridge height	122"
Wall height	72"
Interior size	16' 4" x 16' 4"
Interior area	269 sq ft
Porch size	16' 4" x 98"
Porch area	135 sq ft

PVC Roof	650g/m²
Canvas	FPTC 420, 420 SC, 420 FRSC, Rip Stop 420
Cieling liner	IH 230
Interior walls	FPTC 420, 420 SC, 420 FRSC, Rip Stop 420
Frame	1.5" powder coated steel
Wood frame	3" round treated pine

Platform dimensions

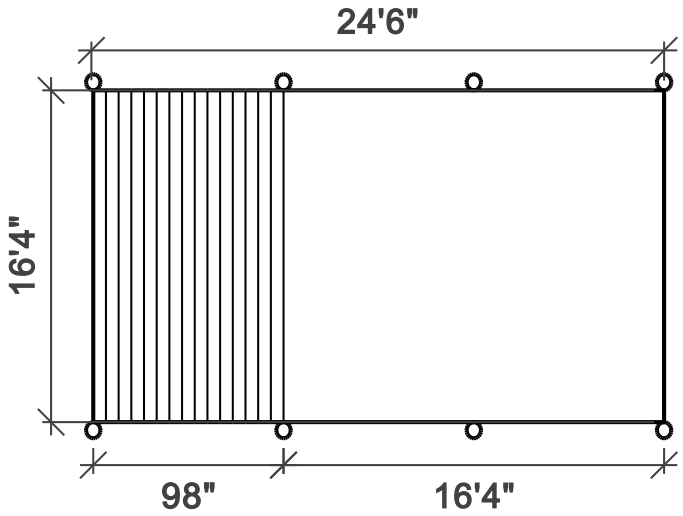

Platform is not provided - to be built on site

www.osso.one