Acadia 12 Specifications

Front View

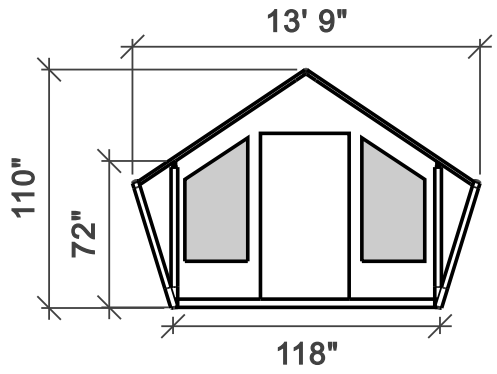

Side View

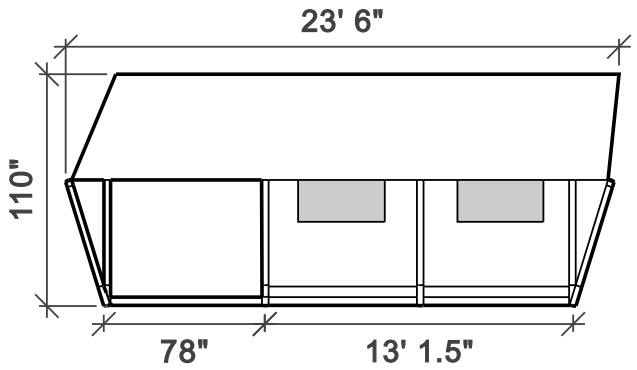

Ridge height	110"
Wall height	72"
Interior size	118" x 13' 1.5"
Interior area	129 sq ft
Porch size	118" x 72"
Porch area	64.5 sq ft

PVC Roof	650g/m²
Canvas	FPTC 420, 420 SC, 420 FRSC, Rip Stop 420
Cieling liner	Inherent 230
Interior walls	FPTC 420, 420 SC, 420 FRSC, Rip Stop 420
Frame	1.5" powder coated steel
Wood frame	3" round treated pine

Platform dimensions

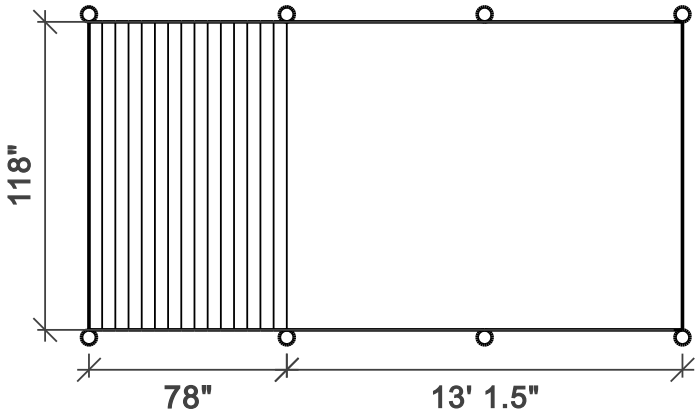

Platform is not provided - to be built on site